* NOT INCLUDED IN KIT
MUST BE PURCHASED SEPERATELY

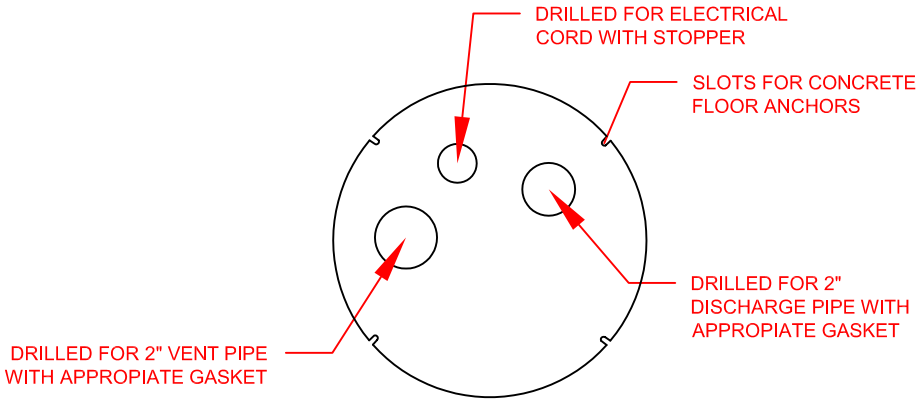

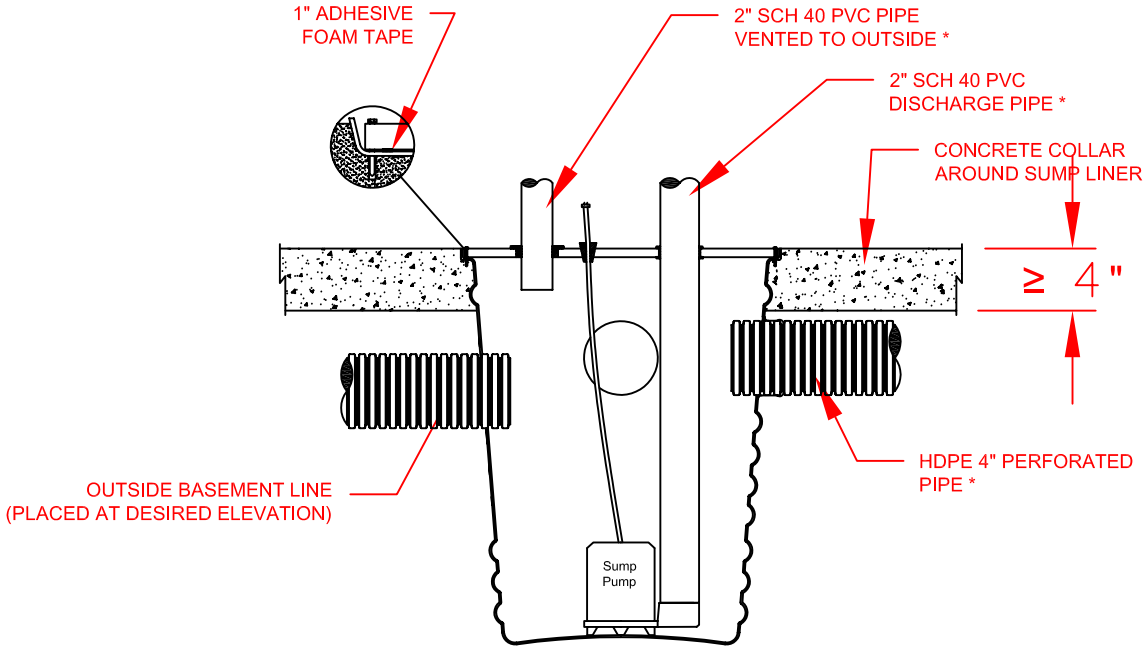

© 2007 HANCOR, INC.

REV.	DESCRIPTION	BY	MM/DD/YY	CHK'D
1	UPDATED DRAWING	TJR	06/26/07	CKS

HANCOR, INC. HAS PREPARED THIS DETAIL BASED ON INFORMATION PROVIDED TO HANCOR. THIS DRAWING IS INTENDED TO DEPICT THE COMPONENTS AS REQUESTED. HANCOR HAS NOT PERFORMED ANY ENGINEERING OR DESIGN SERVICES FOR THIS PROJECT, NOR HAS HANCOR INDEPENDENTLY VERIFIED THE INFORMATION SUPPLIED. THE INSTALLATION DETAILS PROVIDED HEREIN ARE GENERAL RECOMMENDATIONS AND ARE NOT SPECIFIC FOR THIS PROJECT. THE DESIGN ENGINEER SHALL REVIEW THESE DETAILS PRIOR TO CONSTRUCTION. IT IS THE DESIGN ENGINEERS RESPONSIBILITY TO ENSURE THE DETAILS PROVIDED HEREIN MEETS OR EXCEEDS THE APPLICABLE NATIONAL, STATE, OR LOCAL REQUIREMENTS AND TO ENSURE THAT THE DETAILS PROVIDED HEREIN ARE ACCEPTABLE FOR THIS PROJECT.

RADON VENTED SUMP WELL LID WITH LINER

DRAWING NUMBER: STD–1008

Hancor
401 OLIVE ST.
FINDLAY, OHIO 45839

DRAWN BY: CKS
DATE: 05/25/05
CK'D BY:
SCALE: NTS
SHEET 1 OF 1

S:\AppEng-shared\AD6-Hancor Standard Details\1000 Series - Residential Drainage\Hancor\1008_Radon_Vented_Sump_Well_Lid_with_Liner.dwg, Model, 10/2/2007 4:17:03 PM, cslimmers, Adobe PDF