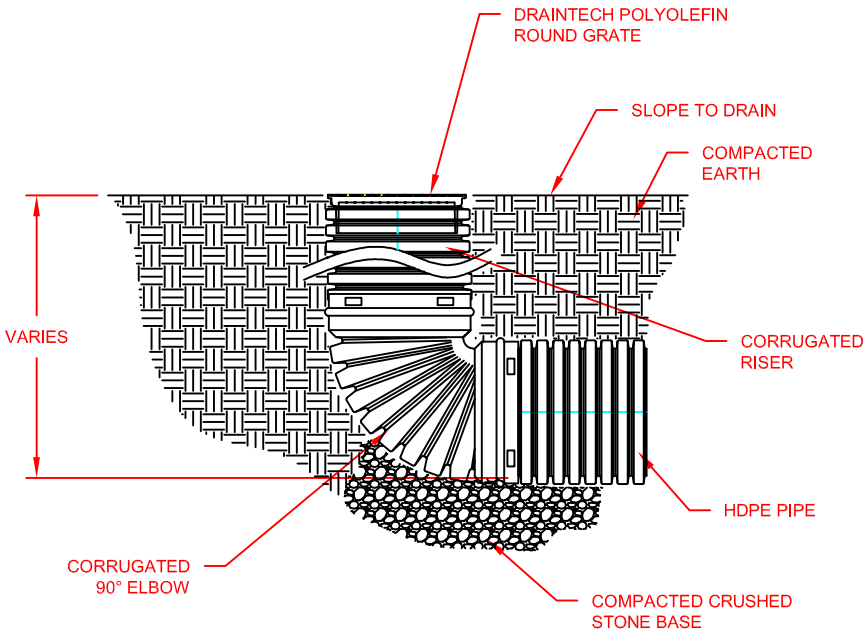


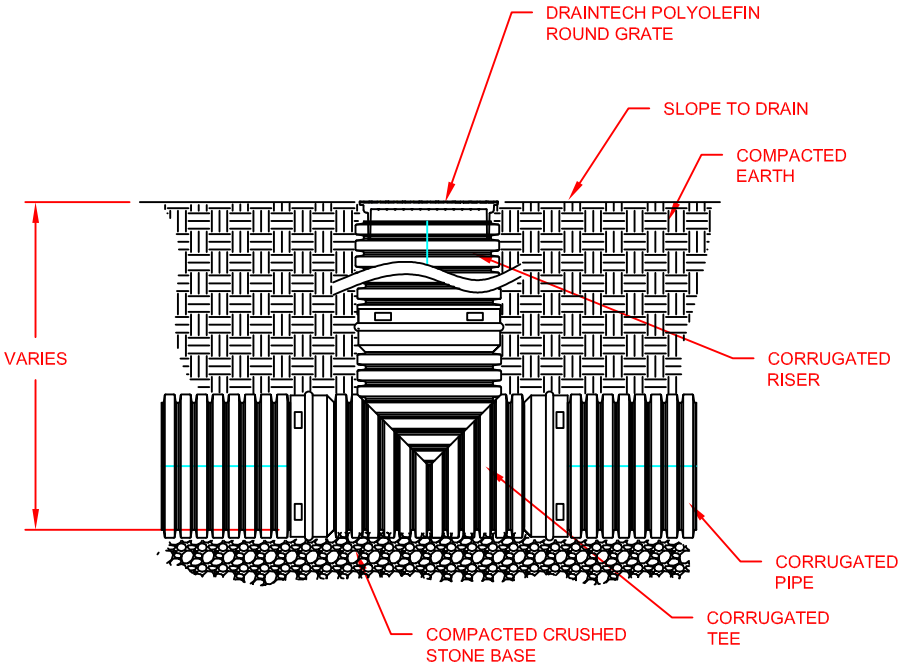


NOTES:

1. MAX COVER OVER TOP OF PIPE IS 4 FT.CONTACT HANCOR IF OTHERWISE GREATER.

2. GRATE OR LID MUST BE INSTALLED PRIOR TO BACKFILLING

© 2007 HANCOR, INC.

| REV. | DESCRIPTION | BY | MM/DD/YY | CHK'D |
|---|---|---|---|---|
| 1 | UPDATED DRAWING | TJR | 09/14/07 | |

HANCOR, INC. HAS PREPARED THIS DETAIL BASED ON INFORMATION PROVIDED TO HANCOR. THIS DRAWING IS INTENDED TO DEPICT THE COMPONENTS AS REQUESTED. HANCOR HAS NOT PERFORMED ANY ENGINEERING OR DESIGN SERVICES FOR THIS PROJECT, NOR HAS HANCOR INDEPENDENTLY VERIFIED THE INFORMATION SUPPLIED. THE INSTALLATION DETAILS PROVIDED HEREIN ARE GENERAL RECOMMENDATIONS AND ARE NOT SPECIFIC FOR THIS PROJECT. THE DESIGN ENGINEER SHALL REVIEW THESE DETAILS PRIOR TO CONSTRUCTION. IT IS THE DESIGN ENGINEERS RESPONSIBILITY TO ENSURE THE DETAILS PROVIDED HEREIN MEETS OR EXCEEDS THE APPLICABLE NATIONAL, STATE, OR LOCAL REQUIREMENTS AND TO ENSURE THAT THE DETAILS PROVIDED HEREIN ARE ACCEPTABLE FOR THIS PROJECT.

**CORRUGATED ELBOW/TEE W/CORR. PIPE AND ROUND GR.**

DRAWING NUMBER: STD-1110B

Hancor®
401 OLIVE ST.
FINDLAY, OHIO 45839

| | |
|---|---|
| DRAWN BY: | JCB |
| DATE: | 09.22.05 |
| CK'D BY: | |
| SCALE: | NTS |
| SHEET | OF |

S:\AppEng-shared\ADS-Hancor Standard Details\1100 Series - DrainTech_Installation_Details\Hancor\1110B_CorrElbowTee_RoundGrate.dwg, Model, 9/18/2007 4:22:28 PM, trader, CutePDF Writer