12"-30" N-12 HP WATER TIGHT MANHOLE CONNECTION WITH Z-LOK BOOT (DUAL WALL)

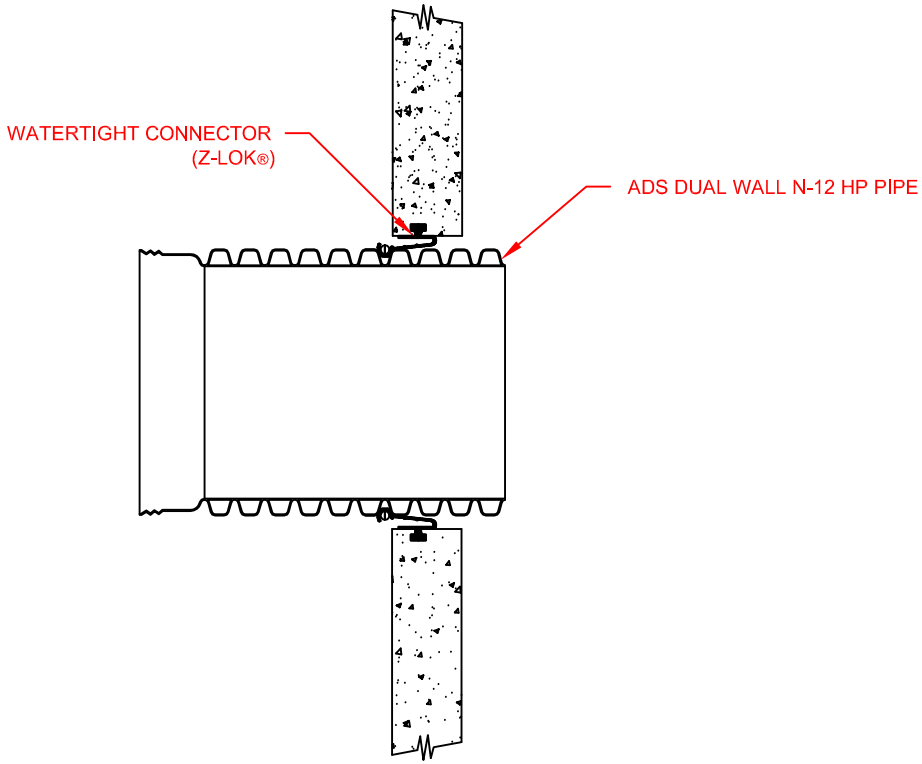

TYPE 4: Z-LOK (PRE-CAST MANHOLE GASKET)
SECURED DIRECTLY TO EXTERIOR
PIPE CORRUGATIONS

SEE STANDARD DETAIL STD-201 AND TECHNICAL NOTE: 5.04 HDPE CONNECTIONS TO MANHOLES AND STRUCTURES FOR INSTALLATION RECOMMENDATIONS.

PIPE SIZE (IN)	PIPE OD (IN)	Z-LOK** RING
12	14.5	8016
15	17.6	8019
18	21.2	8022
24	28.1	8029
30	35.3	8039

NOTES:

PERFORMANCE HIGHLY DEPENDENT ON INSTALLATION. CONTRACTOR MUST INSURE MANHOLE GASKET IS UNIFORMLY SEATED AROUND STRUCTURE ADAPTER. EXTRA PRECAUTIONS MUST BE TAKEN TO PREVENT DIFFERENTIAL SETTLEMENT BETWEEN THE PIPE AND MANHOLE.

** THIRD PARTY - CODES AS SUPPLIED BY MANUFACTURER

Z-LOK is a registered trademark of A-LOK Products, Inc. (www.a-lok.com)

© 2009 HANCOR, INC.

REV.	DESCRIPTION	BY	MM/DD/YY	CHK'D

HANCOR, INC. HAS PREPARED THIS DETAIL BASED ON INFORMATION PROVIDED TO HANCOR. THIS DRAWING IS INTENDED TO DEPICT THE COMPONENTS AS REQUESTED. HANCOR HAS NOT PERFORMED ANY ENGINEERING OR DESIGN SERVICES FOR THIS PROJECT, NOR HAS HANCOR INDEPENDENTLY VERIFIED THE INFORMATION SUPPLIED. THE INSTALLATION DETAILS PROVIDED HEREIN ARE GENERAL RECOMMENDATIONS AND ARE NOT SPECIFIC FOR THIS PROJECT. THE DESIGN ENGINEER SHALL REVIEW THESE DETAILS PRIOR TO CONSTRUCTION. IT IS THE DESIGN ENGINEERS RESPONSIBILITY TO ENSURE THE DETAILS PROVIDED HEREIN MEETS OR EXCEEDS THE APPLICABLE NATIONAL, STATE, OR LOCAL REQUIREMENTS AND TO ENSURE THAT THE DETAILS PROVIDED HEREIN ARE ACCEPTABLE FOR THIS PROJECT.

WATERTIGHT STRUCTURE N-12 HP
12"-30" SANITARY DETAIL

DRAWING NUMBER: STD-205C

Hancor®
401 OLIVE ST.
FINDLAY, OHIO 45839

DRAWN BY: JAB
DATE: 4/3/09
CK'D BY:
SCALE: NTS
SHEET: 1 OF 1

S:\AppEng-shared\ADS-Hancor Standard Details\200 Series - Manhole Connections\Hancor\205C_N-12 HP_Sanitary_12-30 Inch_WT_Connection_Corr_Pipe.dwg, Model, 4/29/2009 3:34:24 PM, trader, CutePDF Writer